ENGINE
F9Q SERIES

CONTENTS

GENERAL INFORMATION 11A-0-3
1. SPECIFICATIONS 11A-1-1
SERVICE SPECIFICATIONS 11A-1-1
TORQUE SPECIFICATIONS 11A-1-2
2. SPECIAL TOOLS 11A-2-1
3. CRANKSHAFT PULLEY 11A-3-1
4. TIMING BELT 11A-4-1
5. OIL SEPARATOR AND OIL RETURN PIPE 11A-5-1
6. INJECTION PUMP AND FUEL INJECTOR 11A-6-1
7. VACUUM HOSE 11A-7-1
8. INTAKE AND EXHAUST 11A-8-1
9. WATER PUMP AND WATER PIPE 11A-9-1
10. CAMSHAFT AND VACUUM PUMP 11A-10-1
11. CYLINDER HEAD 11A-11-1
12. OIL PAN AND OIL PUMP 11A-12-1
13. PISTON 11A-13-1
14. CYLINDER BLOCK 11A-14-1

© Mitsubishi Motors Corporation Jun. 2000 PWEE0001

NOTES

Description		Specification
Type		F9Q1, F9Q2
Number and arrangement of cylinders		4 in-line
Total displacement		1870 cm^3
Cylinder bore × Stroke		83 × 93
Compression ratio		19
Valve mechanism		Single overhead camshaft
Number of valve	Intake	4
	Exhaust	4
Valve timing	Intake opening	BTDC 3°
	Intake closing	ABDC 21°
	Exhaust opening	BBDC 46°
	Exhaust closing	BTDC 6°
Turbocharger		Exhaust gas turbocharger
Fuel injection system		Direct injection system (common rail fuel injection)

1. SPECIFICATIONS

SERVICE SPECIFICATIONS

Item		Standard	Limit
Timing belt			
Timing belt tension Hz		90 ± 15	-
Camshaft and vacuum pump			
End play mm		0.05 - 0.13	-
Cylinder head			
Piston protrusion above cylinder block mm		0.653 - 0.786	-
Valve stem diameter mm		6.98 - 6.99	-
Valve seat angle		45°	-
Valve projection mm		-0.03 - 0.21	-
Cylinder head overall height mm		161.9 - 162.1	-
Flatness of cylinder head gasket surface mm		0.05	-
Valve spring free height mm		45.8	-
Valve guide inner diameter mm		7.00 - 7.02	-
Valve guide outer diameter mm		12.03 - 12.05	-
Valve guide installation height mm		80.7 - 81.4	-
Tappet height mm		34.97 - 34.99	-
Valve clearance mm	Intake	0.20	-
	Exhaust	0.40	-
Piston			
Piston outer diameter mm		80	-
Piston ring thickness mm	Piston ring No.1	2.5	-
	Piston ring No.2	2.0	-
	Oil ring	3.0	-
Connecting rod length mm		139	-

TORQUE SPECIFICATIONS

Item	Nm
Crankshaft pulley	
Bracket bolt	44 ± 4
Crankshaft pulley	20 ± 2 + 115° ± 15°
Timing belt	
Timing belt cover	9 ± 0.9
Tensioner pulley nut	50 ± 5
Tensioner plate bolt	10 ± 1
Camshaft sprocket bolt	60 ± 6
Oil separator and oil return pipe	
Oil return pipe bolt	12 ± 1
Turbocharger oil feed pipe bolt	24 ± 10
Turbo nipple	26 ± 2
Injection pump and fuel injector	
High pressure pipe nut	25 ± 2
Pressure sensor	25 ± 0.2
Injection rail mounting bolt	25 ± 2
Injection pump pulley	15 ± 1 + 60° ± 10°
Injection pump bracket bolt	62 ± 6
Pressure regulator	35 ± 5
Intake and exhaust	
Engine hanger bolt	20 ± 2
Flap box bolt	8 ± 0.8
EGR valve bolt	8 ± 0.8
Turbocharger nut	24 ± 10
Manifold nut	28 ± 2
Water pump and water pipe	
Water pump bolt	10 ± 1
Water inlet pipe bolt	39 ± 3

Item	Nm
Camshaft and vacuum pump	
Engine hanger bolt	13 ± 1
Glow plug	15 ± 1
Camshaft position sensor screw	8.8 ± 1.5
Cylinder head cover bolt	12 ± 1
Bearing cap bolt	20 ± 2
Oil pan and oil pump	
Oil pan bolt	14 ± 1
Oil pump bolt	25 ± 2
Cylinder block front plate bolt	15 ± 1.5
Piston	
Connecting rod cap bolt	50 ± 5
Cylinder block	
Flywheel bolt	55 ± 5
Bearing cap bolt	65 ± 6

2. SPECIAL TOOLS

Tool	Number	Name	Use
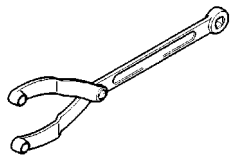	MB990767	Camshaft sprocket holder	Removal of camshaft sprocket
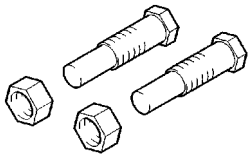	MD998715	Pulley holder pin	Retaining the camshaft sprocket (use together with MB990767)
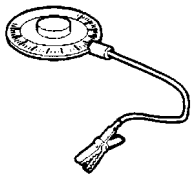	MB991614	Angle gauge	Tightening cylinder head bolts
	MB996014	Valve spring compressor	Removal of valve spring split cones
	MB996015	Flywheel stopper	Locking the flywheel
	MB996016	Reamer	Reaming valve guides
	MB996020	Valve guide remover	Pressing in valve guides
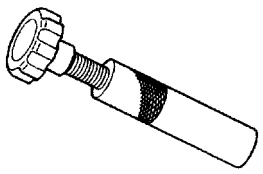	MB996021	Valve stem seal remover	Removal of valve guide seal
	MB996024	Reamer	Reaming valve guides

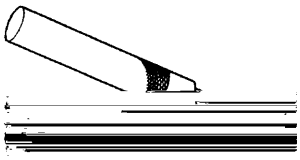	MB996029	Valve guide installer	Pressing in valve guides
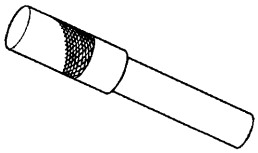	MB996031	Valve stem seal installer	Installation of valve guide seal
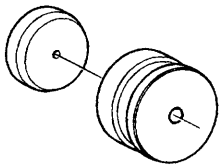	MB996038	Oil seal installer	Installation of crankshaft oil seal (flywheel end)
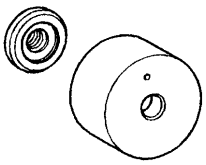	MB996040	Oil seal installer	Installation of crankshaft oil seal (timing gear end)
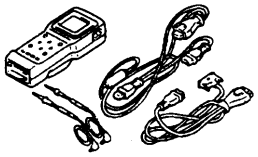	MB991502	MUT-II sub-assembly	• Drive belt tension measurement • Fuel injection timing check and adjustment • Idle speed check
	MB991668	Belt tension meter set	Timing belt tension measurements (Use with MUT-II)
	MB996048	Belt pretensioner	Installation of timing belt
	MB996043	Sprocket stopper	Locking the injection pump sprocket
	MH062464	Gear puller	Removal of fuel injection pump gear

8. INTAKE AND EXHAUST

REMOVAL AND INSTALLATION

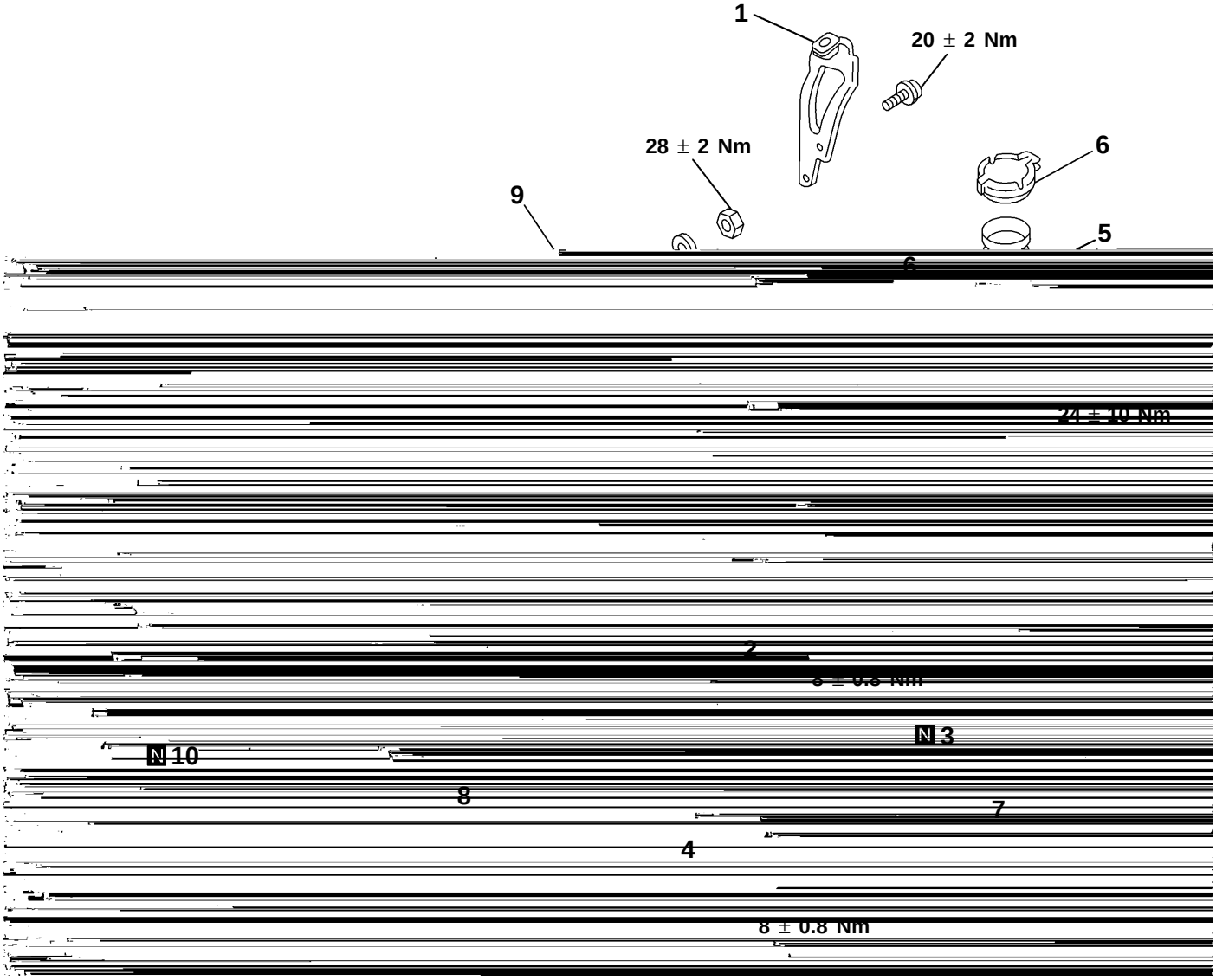

Removal steps

1. Engine hanger
2. Flap box
3. EGR valve
4. EGR valve gasket
5. EGR hose
6. EGR hose clamp
7. Turbocharger
8. Intake manifold
9. Exhaust manifold
10. Manifold gasket

10. CAMSHAFT AND VACUUM PUMP

REMOVAL AND INSTALLATION

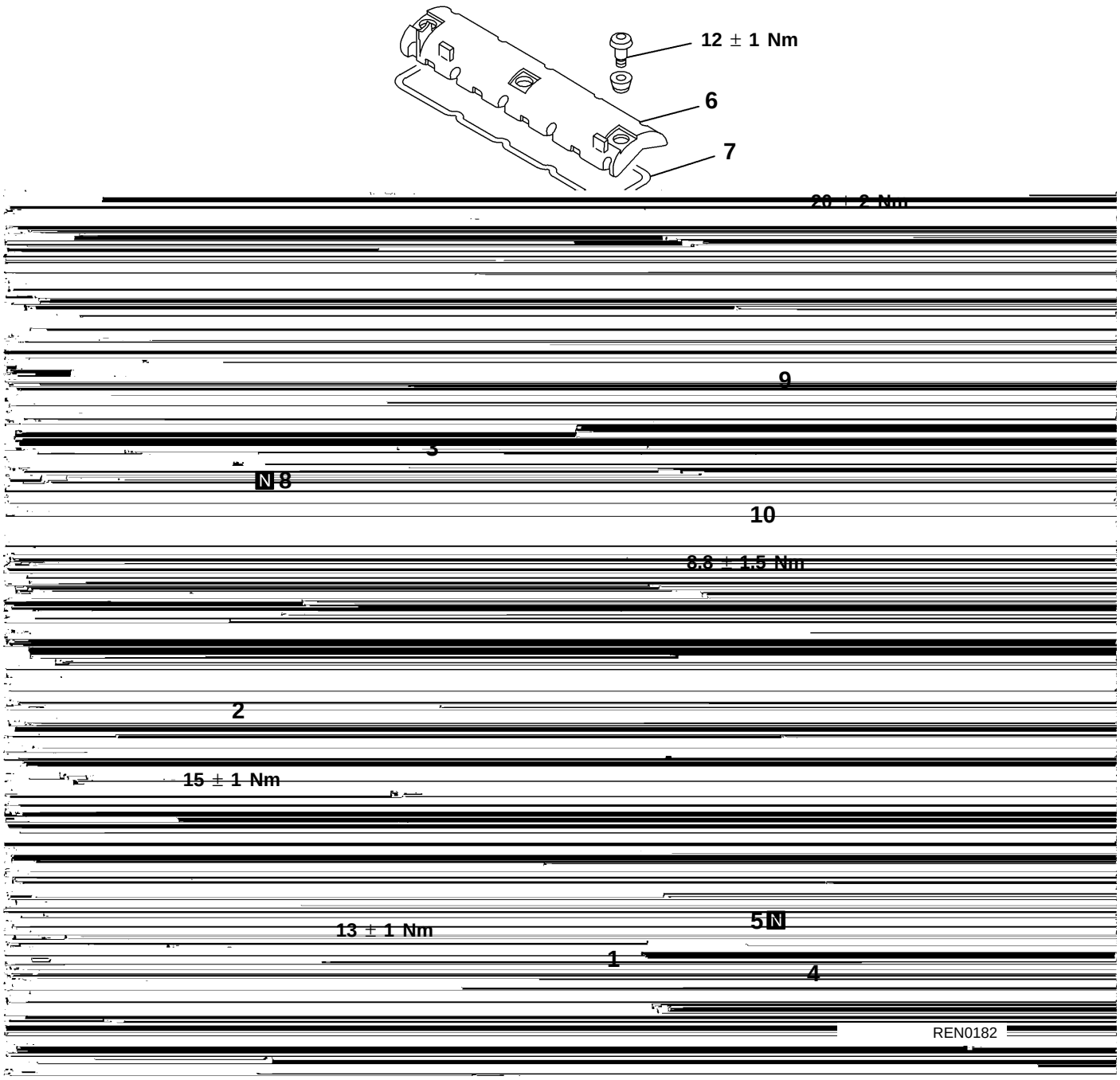

Removal steps

1. Engine hanger
2. Glow plug
3. Camshaft position sensor
4. ▶C◀ Vacuum pump
5. Vacuum pump gasket
6. Cylinder head cover
7. Cylinder head cover gasket
8. ▶B◀ Oil seal
9. ◀A▶ ▶A◀ Bearing cap
10. Camshaft

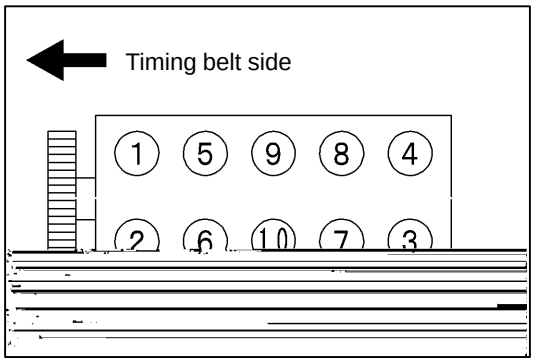

REMOVAL SERVICE POINT

◀A▶ BEARING CAP REMOVAL

Remove the bearing cap bolts by loosening them in two or three steps in the order shown in the illustration.

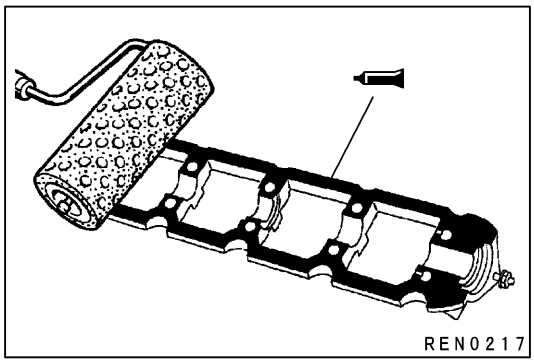

INSTALLATION SERVICE POINTS

▶A◀ BEARING CAP INSTALLATION

(1) Apply sealant Loctite 518 on the bearing cap at a position where it comes in contact with the cylinder head.

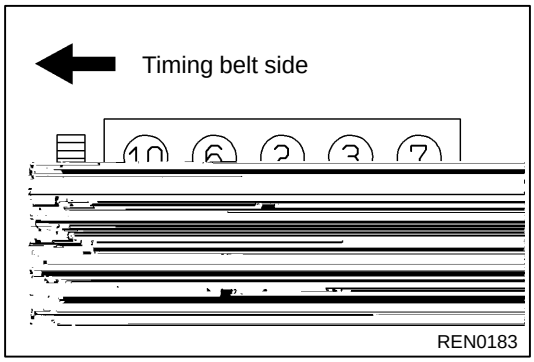

(2) Tighten the bearing cap bolts to a torque of 20 ± 2 Nm in the sequence given in the illustration.

▶B◀ OIL SEAL INSTALLATION

Using the special tool, install the oil seal.

▶C◀ VACUUM PUMP INSTALLATION

Install the vacuum pump while aligning coupling section with the notch in the camshaft.

REN0184

INSPECTION

CAMSHAFT

Measure the end play. Replace the camshaft if the measurement does not meet the standard value.

Standard value: 0.05 – 0.13 mm

11. CYLINDER HEAD

REMOVAL AND INSTALLATION

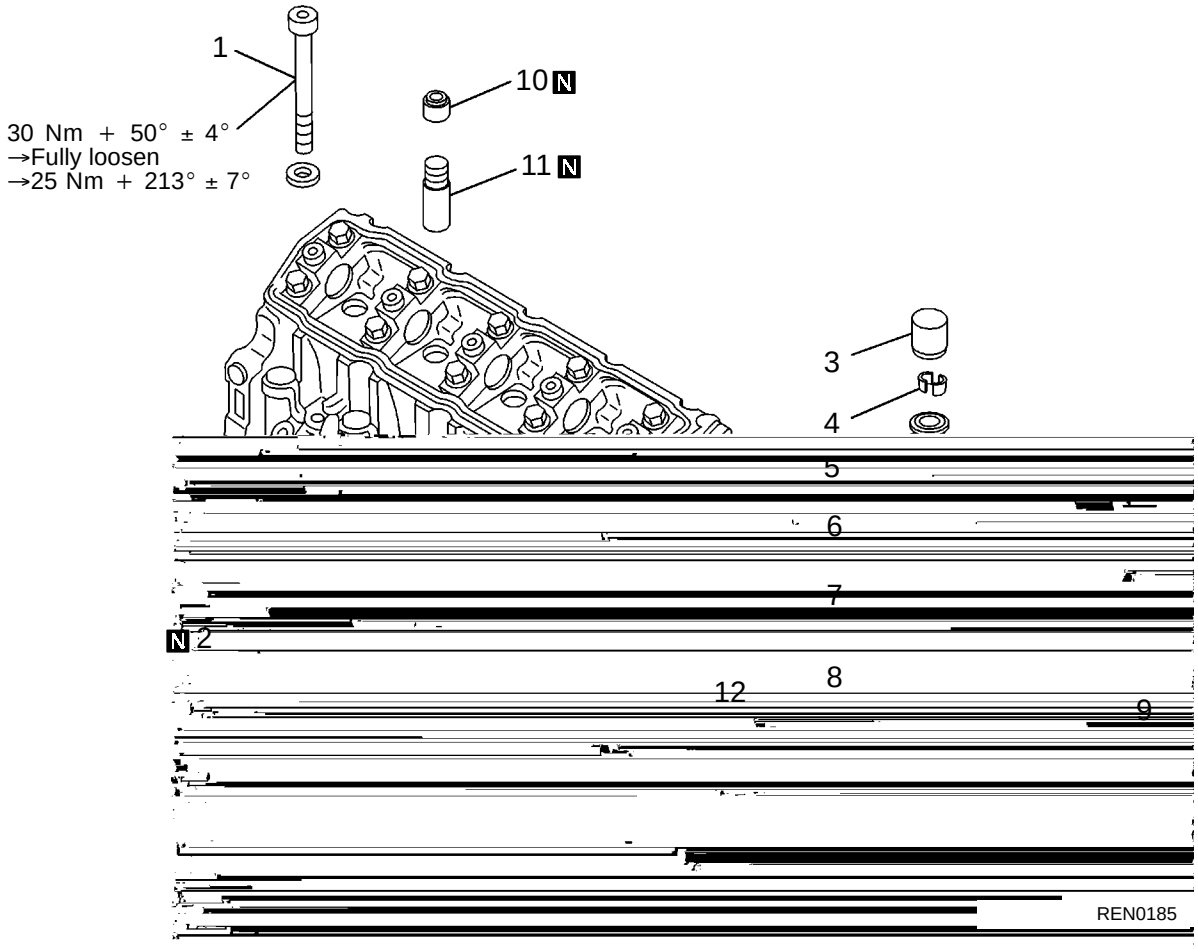

Removal steps

▶E◀ □	1. Cylinder head bolt	
▶D◀	2. Cylinder head gasket	
	3. Tappet	
◀A▶ ▶C◀	4. Retainer locks	
	5. Valve spring retainer	
◀A▶ ▶C◀	6. Valve spring	
	7. Valve spring seat	
	8. Intake valve	
	9. Exhaust valve	
◀B▶ ▶B◀	10. Valve stem seal	
◀C▶ ▶A◀	11. Valve guide	
	12. Cylinder head	

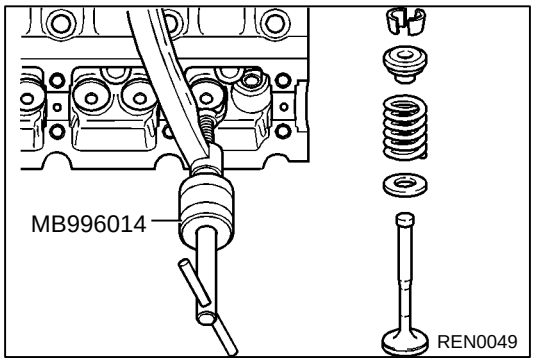

REMOVAL SERVICE POINTS

◀A▶ RETAINER LOCKS REMOVAL

(1) Fit valve spring compressor MB996014 on the cylinder head as shown in the illustration.
(2) Press down the valve spring retainer and remove the retainer locks.

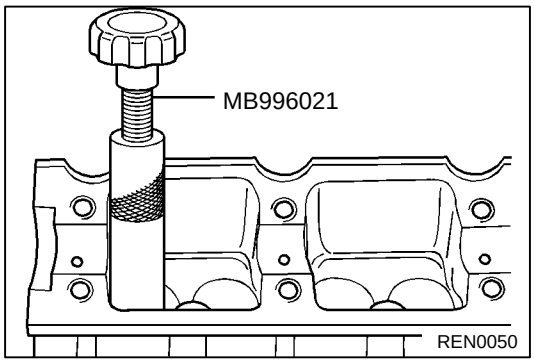

◀B▶ VALVE STEM SEAL REMOVAL

Remove the seal with valve stem seal remover MB996021.

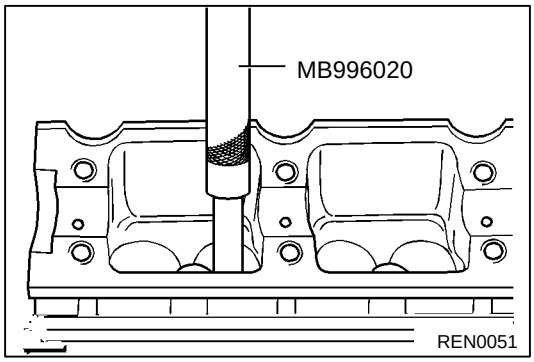

◀C▶ VALVE GUIDE REMOVAL

(1) Support the cylinder head.
(2) Press out the valve guides towards the valve seat with valve guide remover MB996020.

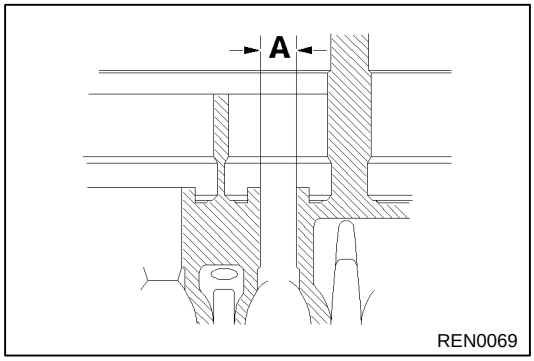

INSTALLATION SERVICE POINTS

▶A◀ VALVE GUIDE INSTALLATION

(1) Measure the diameter of the bores for the valve guides in the cylinder head. If a measured value does not come within the specified tolerance range, select the oversize valve guide.

Standard value:
Diameter of bore (A): 12 mm

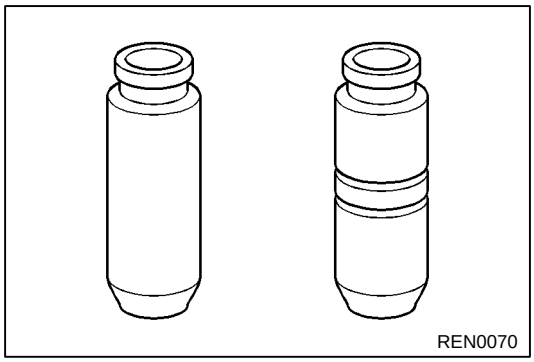

(2) Ream valve guide bore (dimension A) to the outside diameter of the selected oversize valve guides with reamer MB996016.

Oversize valve guide (two grooves) diameter = 12.3 mm

(3) Place the cylinder head on a flat surface.

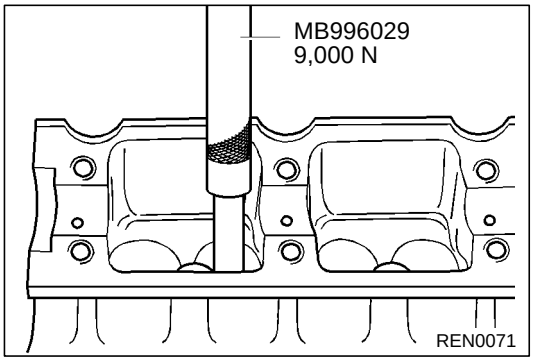

(4) Locate the valve guides with the taper pointing down, on valve guide installer MB996029.
(5) Press in the valve guides until the installer abuts the cylinder head.

Caution
- The pressure exerted on the valve guide must be at least 9,000 N. If the pressure is lower, the valve guide must be removed. Ream the valve guide bore in the cylinder head to the next oversize and press in the corresponding valve guide.

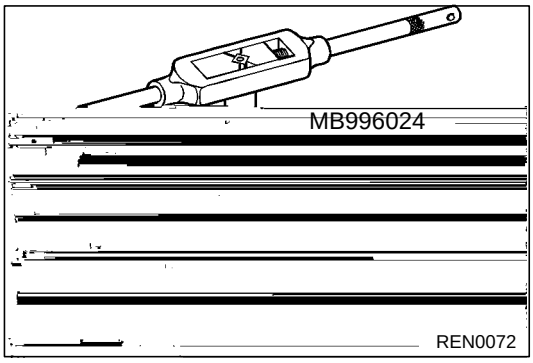

(6) Clean the valve guide inner bores with reamer MB996024.

▶B◀ VALVE STEM SEAL INSTALLATION

(1) Lubricate the valve guides with engine oil.
Introduce the valves through the valve guides.
Locate the protective plastic cap over the valve stem.
(2) Locate the valve stem oil seal. Press in the valve stem oil seal vertically until it abuts the cylinder head with valve stem seal installer MB996031. Remove the protective cap.

Caution
- To avoid damaging the valve stem oil seal, the valves must not be removed again.

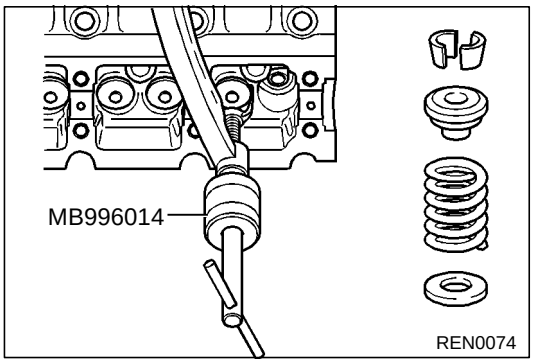

▶C◀ RETAINER LOCKS INSTALLATION

(1) Fit valve spring compressor MB996014 on the cylinder head as shown in the illustration.
(2) Press down the valve spring retainer and fit the retainer locks.

INSPECTION

INTAKE AND EXHAUST VALVES

(1) Measure the valve stem diameter and replace the valve

VALVE SPRING

(1) Measure the valve spring free height. If the measurement does not meet the standard value, replace the valve spring.

Standard value: 45.8 mm

VALVE GUIDE

(1) Measure the inner and outer diameters of the valve guide to confirm that they are within the standard value range.

Standard value:
Inner diameter 7.00 – 7.02 mm
Outer diameter 12.03 – 12.05 mm

(2) Check that the dimension shown in the illustration meets the standard value when the valve guide is installed in the cylinder head.

Standard value: 80.7 – 81.4 mm

VALVE SEAT

Measure at the positions shown in the illustration.

Standard value:
Seat angle 90°

(2) Measure the valve clearance.

Standard value:

Cold engine	Checking	Adjusting
Intake valve mm	0.15 - 0.20	0.20
Exhaust valve mm	0.35 - 0.45	0.40

(3) If the valve clearance is outside the standard value, adjust by replacing the tappets using the following procedure.
(4) Take valve clearance measurement again at the cylinder where the valve clearance is not within the tolerance, and record the measured value.

(5) Measure the wall thickness (X) of the tappet using a micrometer, and record the measured value.
(6) Based on the measurements, select a tappet which will bring the valve clearance to the standard value.

Wall thickness of tappet to be selected =
Wall thickness (X) of tappet having been installed at checking + (Measured value - Standard value)

NOTE
1. Always use new tappets.
2. Tappets are available in thickness from 7.550 mm to 8.150 mm, increasing by increments of 0.025 mm.

(7) Remove the camshaft. Install the selected tappet.
(8) Install the camshaft.
(9) Rotate the camshaft one turn, then check that the valve clearance meets the standard value.

REMOVAL SERVICE POINT

◀A▶ OIL PLATE REMOVAL

(1) Remove the oil plate mounting bolts.
(2) Slide the oil plate toward the flywheel and then lift it off.

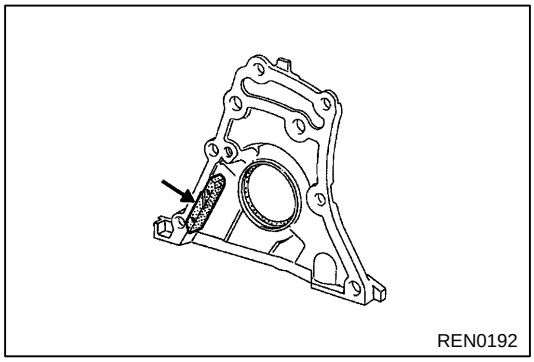

◀B▶ CYLINDER BLOCK FRONT PLATE REMOVAL

(1) Remove the cylinder block front plate.

NOTE
Use care not to lose the pad attached on the cylinder block front plate.

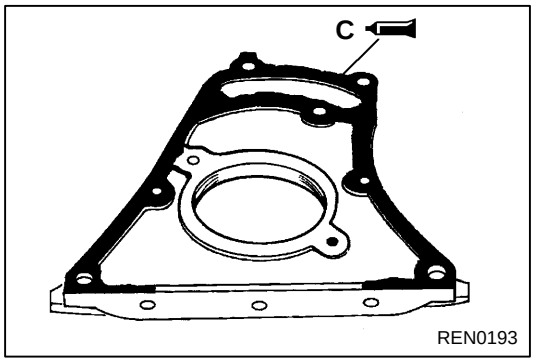

INSTALLATION SERVICE POINTS

▶A◀ CYLINDER BLOCK PLATE, FRONT INSTALLATION

(1) Apply sealant to the cylinder block front plate.

Specified sealant:
Rhodorseal 5661 or equivalent

NOTE
Do not apply too much sealant to avoid the risk of blocking the oilways in zone (C). Remember to fit the chain pad on the cylinder block front plate.

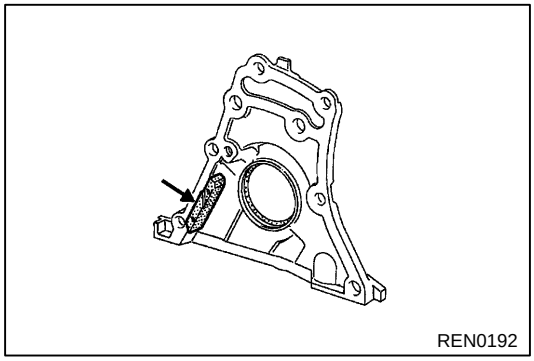

▶B◀ CRANKSHAFT FRONT OIL SEAL INSTALLATION

(1) Use the special tool to install the oil seal.

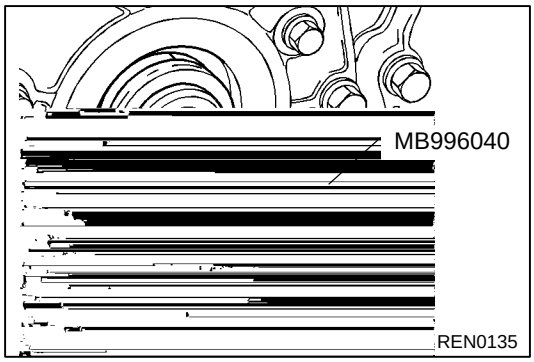

▶C◀ OIL PAN INSTALLATION

(1) Fit the oil pan on the cylinder block with a new gasket while aligning their flywheel side edges with each other.

Caution

- **Be sure to perform the alignment at the flywheel side. Otherwise, the clutch housing could be damaged when the engine is combined with the transmission.**

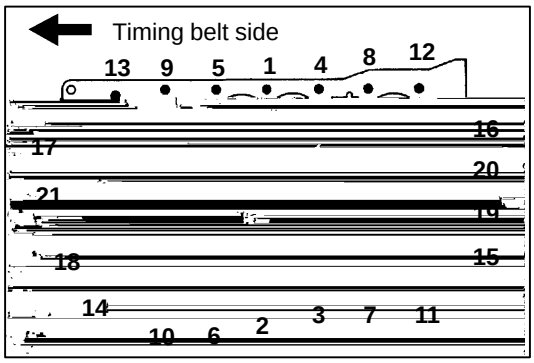

(2) Tighten the oil pan bolts to 8 ± 0.8 Nm in the order shown in the illustration.
(3) Then tighten them to 14 ± 1 Nm in the same order.

13. PISTON

REMOVAL AND INSTALLATION

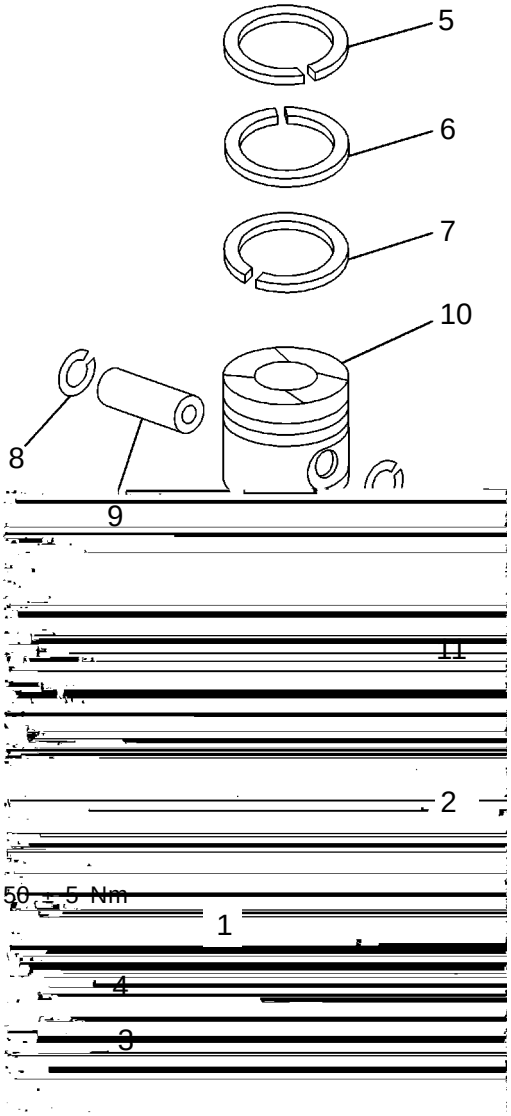

REN0195

Removal steps

1. Connecting rod bolt
◀A▶ 2. Connecting rod cap
3. Connecting rod lower bearing
4. Connecting rod upper bearing
▶B◀ 5. Piston ring No. 1
▶B◀ 6. Piston ring No. 2
7. Oil ring
◀B▶ ▶A◀ 8. Snap ring
◀B▶ ▶A◀ 9. Piston pin
▶C◀ 10. Piston
▶C◀ 11. Connecting rod

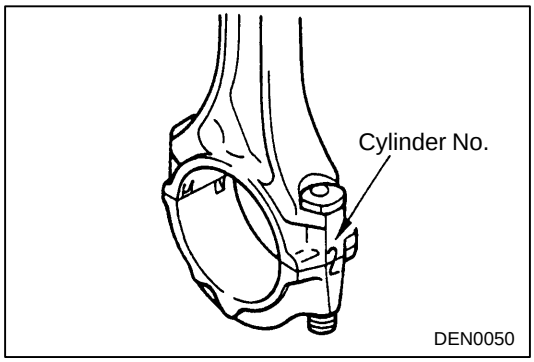

REMOVAL SERVICE POINTS

◀A▶ CONNECTING ROD CAP REMOVAL

(1) Mark the cylinder number on the side of the connecting rod big end for correct reassembly.

Caution

- **Do not use a scriber tool for the marking, in order to avoid starting any cracks in the connecting rods.**
  Use an indelible pencil instead.

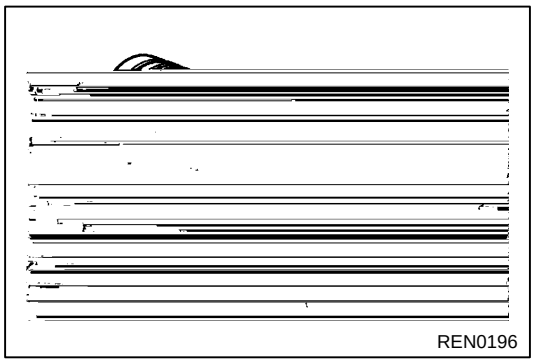

◀B▶ PISTON PIN REMOVAL

(1) Remove the snap ring securing the piston pin.

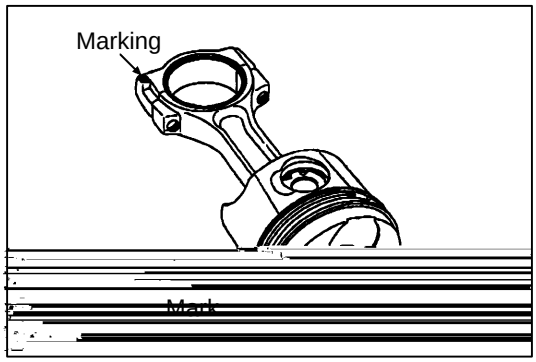

INSTALLATION SERVICE POINTS

▶A◀ PISTON PIN INSTALLATION

(1) Apply engine oil to the piston pin before inserting it into the piston and connecting rod.

Caution

- **Set the connecting rod with its marked side positioned as shown in the illustration.**

(2) Install the snap rings to secure the piston pin.

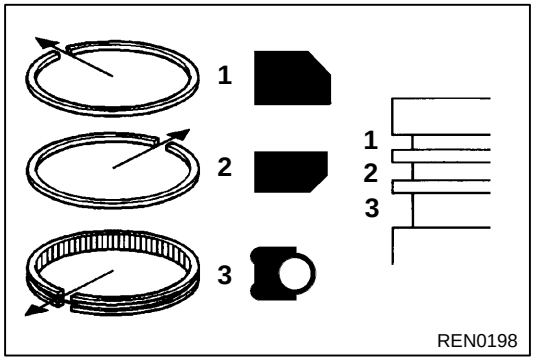

▶B◀ PISTON RING INSTALLATION

(1) Install the piston rings with the side having T (top mark) upward.
(2) Arrange the piston ring end gaps as shown in the illustration.

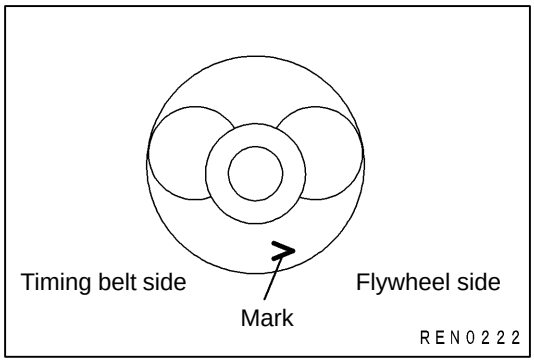

▶C◀ PISTON AND CONNECTING ROD INSTALLATION

(1) Fit the connecting rod/piston assemblies into the cylinder block using a bush, taking care to ensure the fitting direction is correct (V towards flywheel).
(2) Fit the connecting rods onto the lubricated crankshaft crankpins.
(3) Fit each connecting rod bearing cap with its marked side located in the same side with the marked side of the connecting rod.

(4) Tighten the new connecting rod bearing cap bolts to a torque of 50 Nm.

INSPECTION

PISTON

(1) Measure the piston diameter at a point where A = 39 mm

Standard value: 80 mm

PISTON RING

(1) Measure the thickness of the piston rings to check for wear.

Standard value

14. CYLINDER BLOCK

REMOVAL AND INSTALLATION

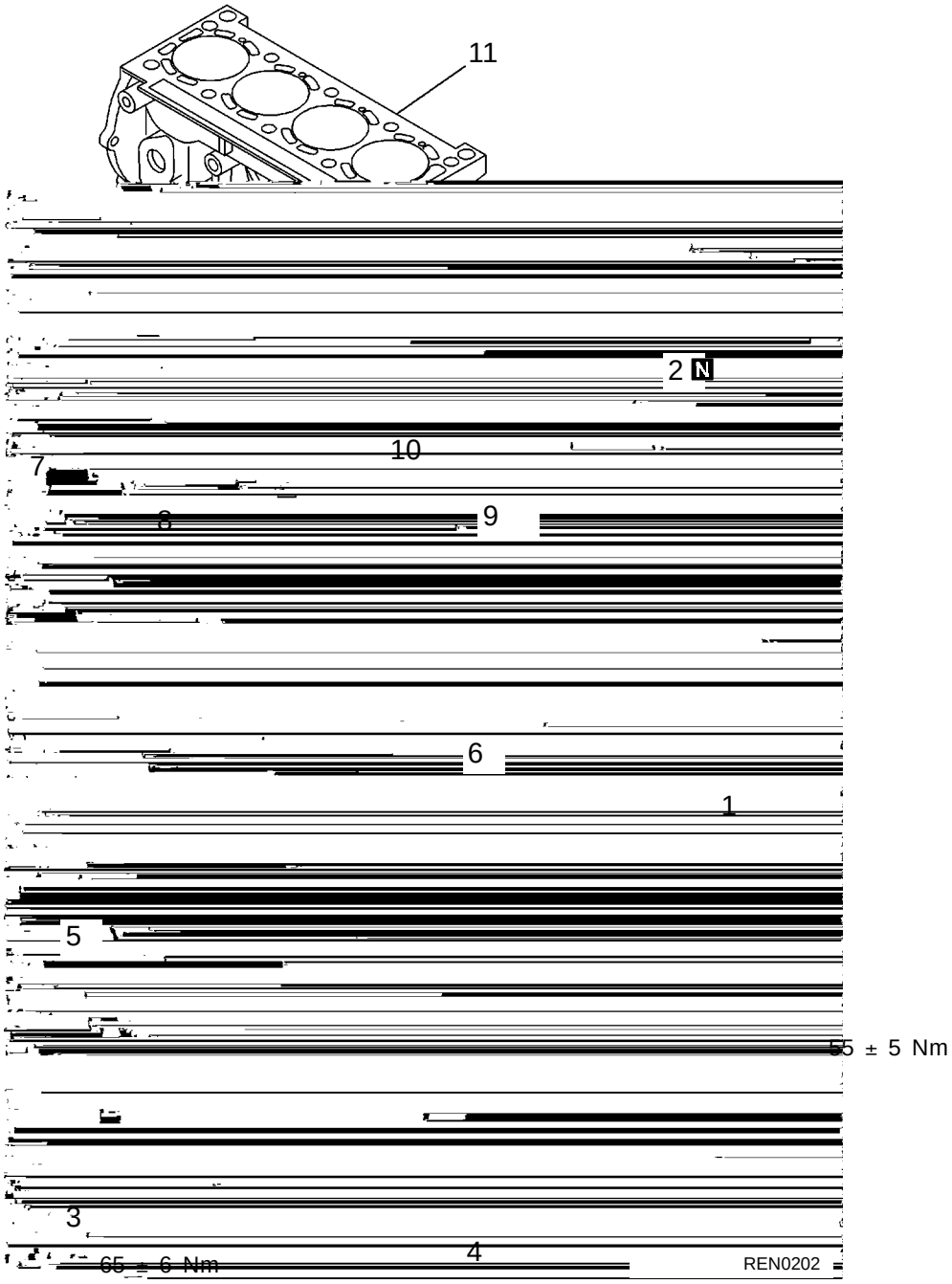

Removal steps

◀A▶ ▶D◀ 1. Flywheel
▶C◀ 2. Oil seal
3. Bolt
▶B◀ 4. Bearing cap
▶A◀ 5. Crankshaft bearing, lower
6. Crankshaft
▶A◀ 7. Crankshaft bearing, upper
▶A◀ 8. Thrust bearing
9. Oil jet
10. Oil jet
11. Cylinder block

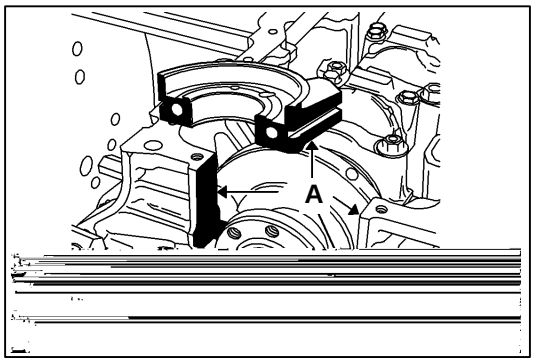

(5) Wipe the portions (shown as (A) in the illustration) on the cylinder block and crankshaft bearing cap with shop towel dampened with solvent.
Wait to dry the cleaned area and then proceed to the next step.

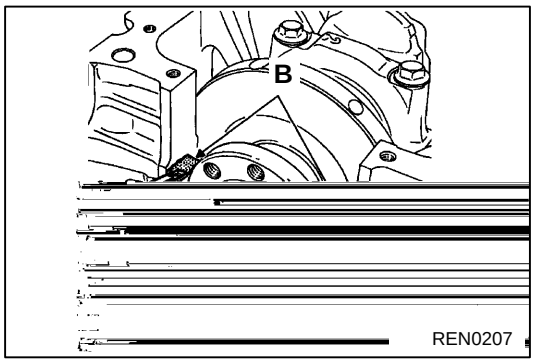

(6) Lightly coat the lower faces of the cylinder block at B with Rhodorseal 5661.
(7) Fit the crankshaft bearing cap No. 1 and torque tighten to 65 Nm.

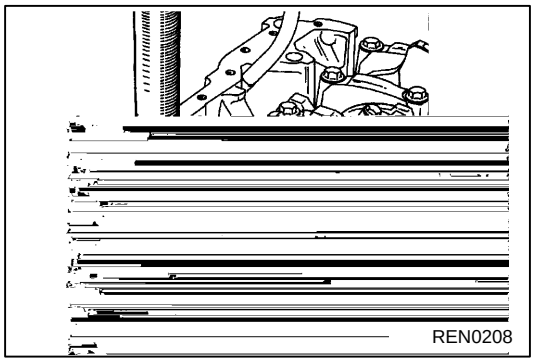

(8) Mix 45 ml of Rhodorseal 5661 (approximately half a 100 grammes tube) with half measure of hardener using a small stick to give a slightly pink coloured, uniform mixture.
(9) Put the mixture into the syringe and inject it into the crankshaft bearing cap grooves.
(10) Allow the mixture to ooze out slightly from either side of the grooves in the crankshaft bearing cap to be sure that the mixture injected has completely filled the sealing groove.
(11) Use a cloth to wipe off any excess mixture, both on the inside and the outside of the cylinder block.

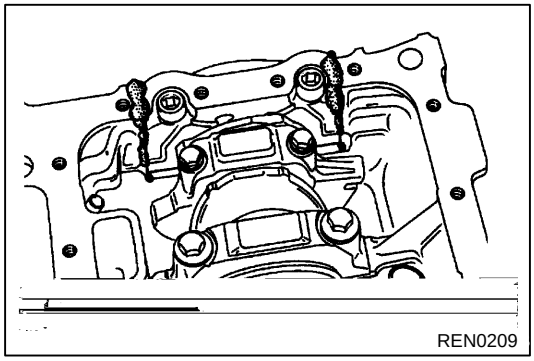

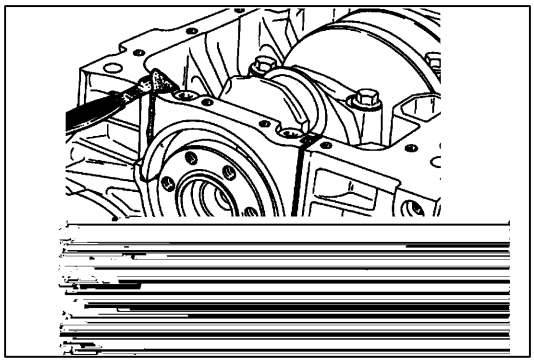

(12) Leave to dry for a few moments then cut the surplus from the sealing face.
(13) Check that the crankshaft turns freely.

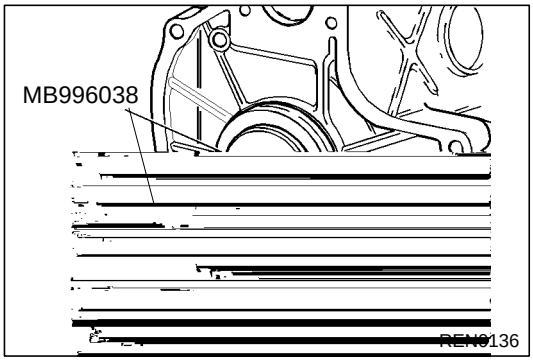

▶C◀ OIL SEAL INSTALLATION

(1) Coat the lip of the oil seal with a thin layer of engine oil.
(2) Locate the installer oil seal guide MB996038 over the crankshaft.
(3) Locate the oil seal over the oil seal installer guide.
(4) Fit the oil seal with oil seal installer MB996038.

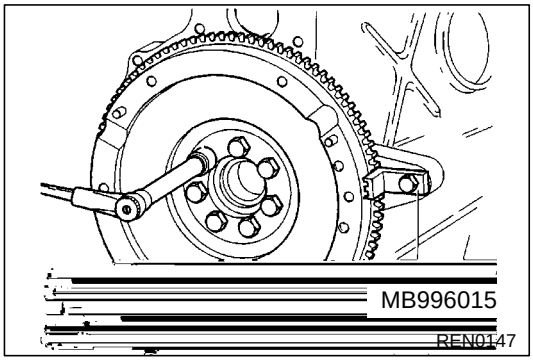

▶D◀ FLYWHEEL INSTALLATION

(1) Use special tool MB996015 to hold the flywheel during installation.